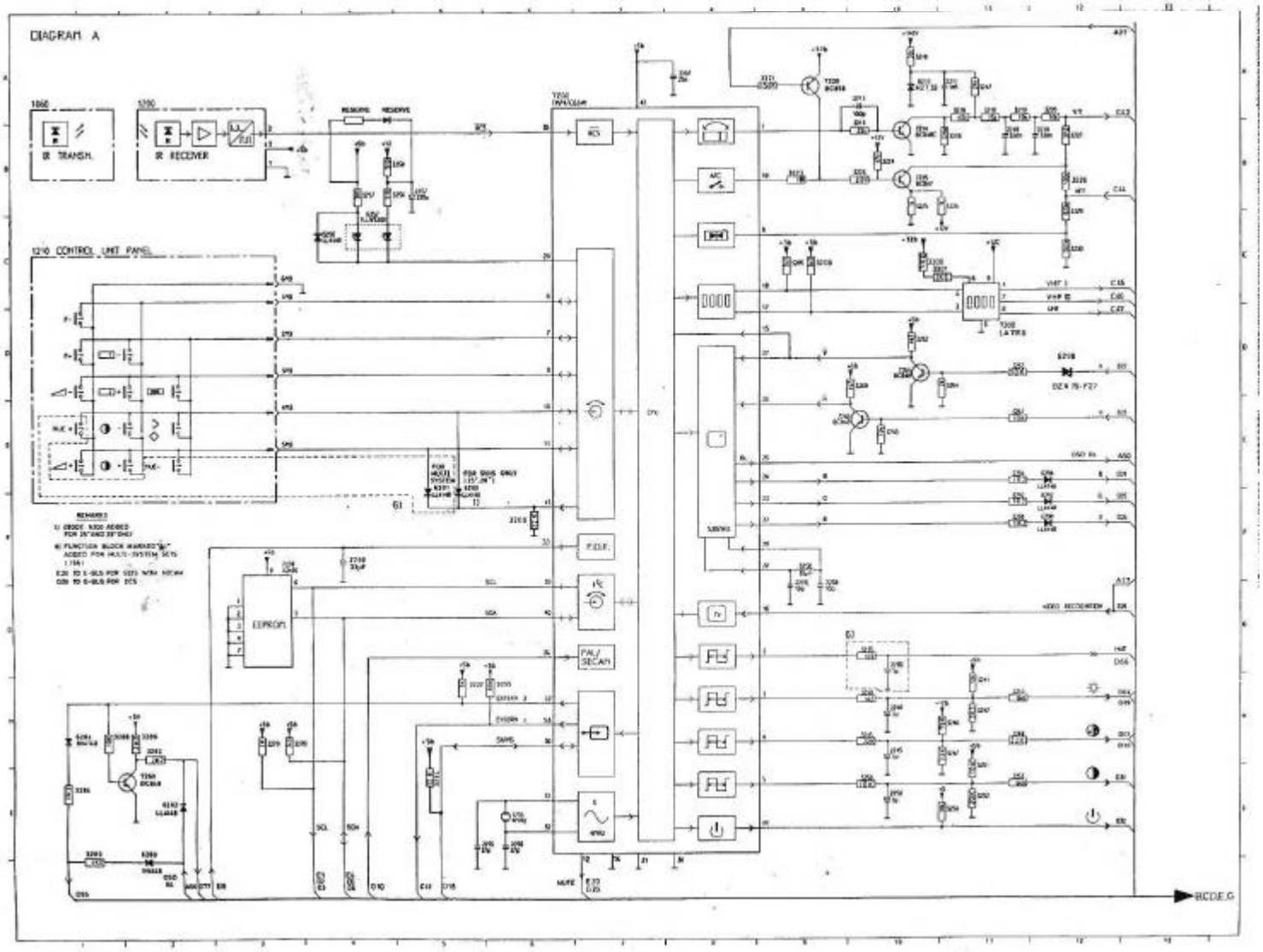
DIAGRAM A
1060
IR TRANSM.
1200
IR RECEIVER
RESERVE
RESERVE
1210 CONTROL UNIT PANEL
EEPROM
P.D.F.
PAL/
SECAM
AFC
LATRS
DZ4 75-F27
BCDE.G